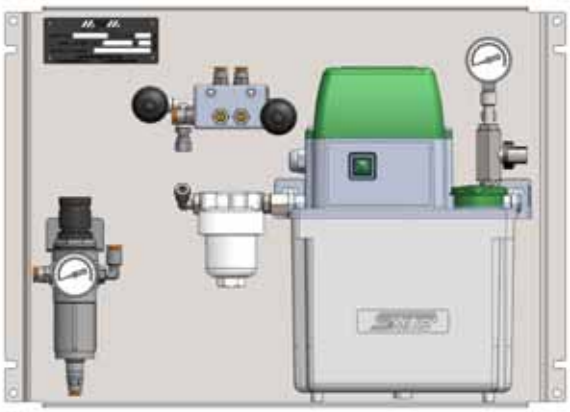

Oil-Air Unit Typ ZH Fig. 1

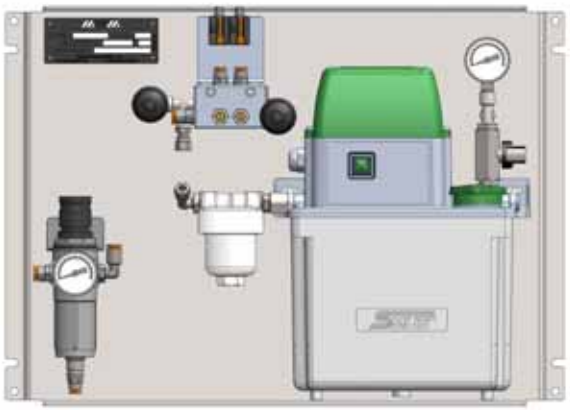

Oil-Air Unit Typ ZHF Fig. 2

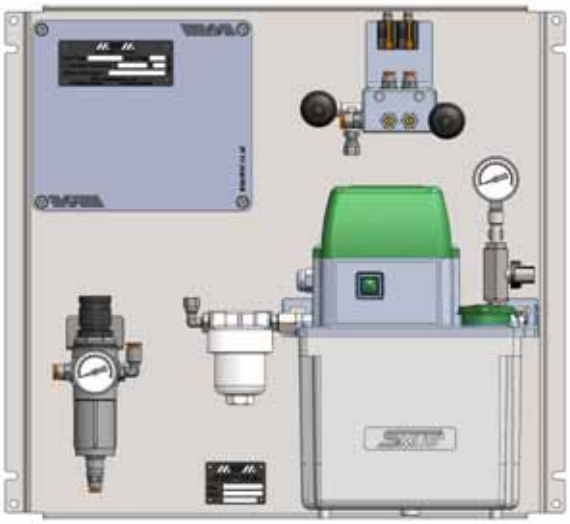

Oil-Air Unit Typ ZHS Fig. 3

Air-oil lubrication unit
Series ZH

MQL System (Minimal Quantity Lubrication)

- **Preassembled *MQL* unit ready for use**
- **Air-oil mixer with reliable precision**
- **Oil dosing elements: 10, 20 or 30 mm^3/stroke**
- **Air-oil outlets: from 1 to 6**
- **Adjustable air flow rate for each line**
- **Minimum lubricant level electric control**
- **Oil filtration: 3 µm $ß_3$ = 200 according to ISO 4406: 15/13/10**
- **Air filtration: 5 µm**

Optional:

- **Air-oil monitoring by IFX-C optical oil streak sensors *(Patent) - Unit version ZHF***
- **Equipped with IFX-C optical oil streak sensors*(Patent) and* PLC unit for cycle setting and operation monitoring - *Unit version ZHS***

Application:

Minimal quantity lubrication for high speed bearings, for example on high frequency spindles, high speed gears, linear guides, ball circulation guides for machine tools, etc; for all applications where pressurized air is required to avoid dust, water and gas contamination; for all machine moving parts (for example small chains).
No pollution, no fog caused by lubrication, when operating at low air delivery pressure.

Technical data:

Working temperature	0 ÷ +50 °C
Oil viscosity at 40°C:	22÷320 cSt
Filtering:	
oil filter element:	3 micron
air filter element (optional):	5 micron
External dimensions Mounting metal plate (WxHxD):	
(ZH and ZHF)	490 x 350 x 160 mm
(ZHS)	490 x 450 x 160 mm
PLC supply voltage:	24 VDC
Pump motor voltage:	
	230 single-phase VAC 50-60Hz
option	115 single-phase VAC 50-60Hz
IFX Optical sensors voltage:	24 VDC

Supply conditions:

All components are installed on an assembly plate and are supplied as a complete system. Each unit is provided with instruction manual. The lubrication unit can be assembled in different executions (see order coding at page 4).
The lubrication unit should be used as component, so it is not provided with energy isolation devices. A solenoid valve, located on the air supply line, and an electric general switch are available on request.

MWM Schmieranlagen Srl
Via G.Galilei 4B I-20068 Peschiera Borromeo (Mi)
Tel:+39 02 550 112 44 Fax +39 02 551 948 78
website://www.mql.it e-mail: info@mql.it

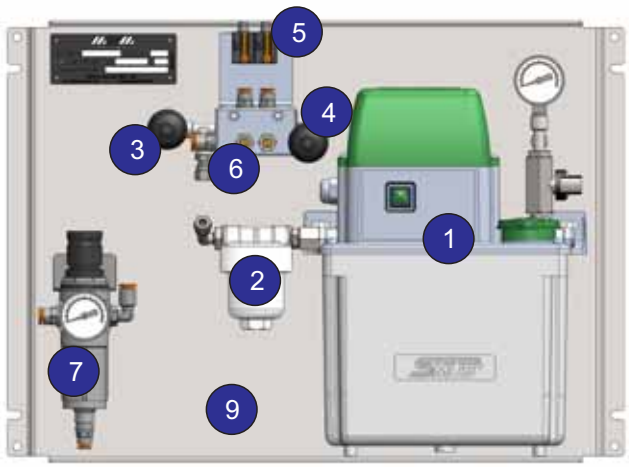

Oil-Air Unit Typ ZHF Fig. 4

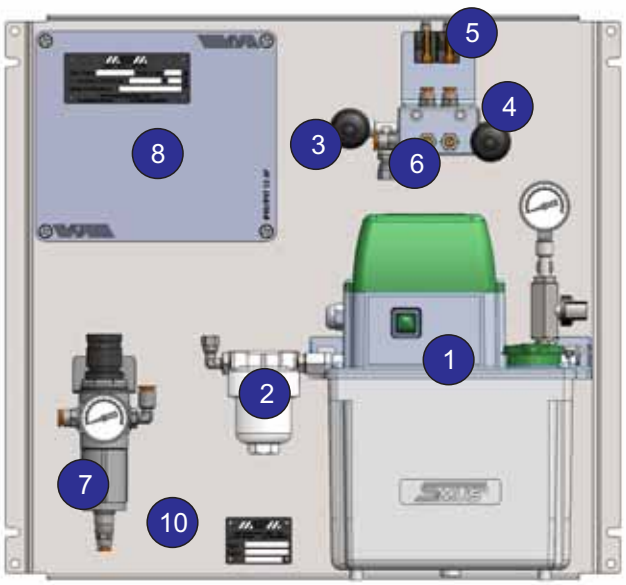

Oil-Air Unit Typ ZHS Fig. 5

Oil-Air Unit Components

1 Pump unit ISHAN SST-B2-3L
2 Oil filter 3 micron
3 Oil pressure switch
4 Air pressure switch
5 Optical oil streak sensors IFX-C
6 Oil-Air Mixer MVE-A
7 Air treatment group with filter 5 micron
8 Programmable unit PLC with protective housing
9 Assembly steel plate 490x350 mm
10 Assembly steel plate 490x450 mm

The optical oil streak sensors *(Patent)*,

directly installed on the air+oil transparent pipe, detects the continuity of the oil flow in Air-Oil lubrication systems. Any image variation of the flowing air+oil mixture is detected and processed according to a patented and advanced technology.
The pre-set value, which refers to the normal standard flow, determines the lighting of a green LED. The possible flow interruption or a miss shot of the air+oil mixer can cause a fault message that is optically indicated by a red LED.

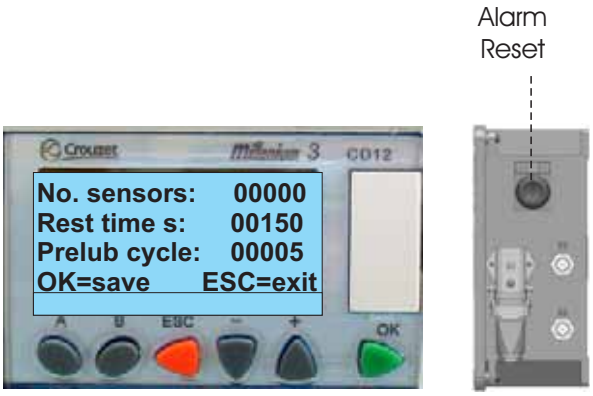

Fig. 6

Programmable unit with display
The PLC unit is available on ZHS Oil-Air Unit, for cycle setting and operation monitoring. The PLC operates the pump lubrication cycles and monitors the signals of oil level switch, air pressure switch, oil pressure switch and optical oil streak sensors IFX-C. An alu-housing serves as protection. The pump driving is managed by PLC and oil delivery is related to the number of lubrication cycles per hour and to the volume of dosing elements.

MWM Schmieranlagen Srl
Via G.Galilei 4B I-20068 Peschiera Borromeo (Mi)
Tel:+39 02 550 112 44 Fax +39 02 551 948 78
website://www.mql.it e-mail: info@mql.it

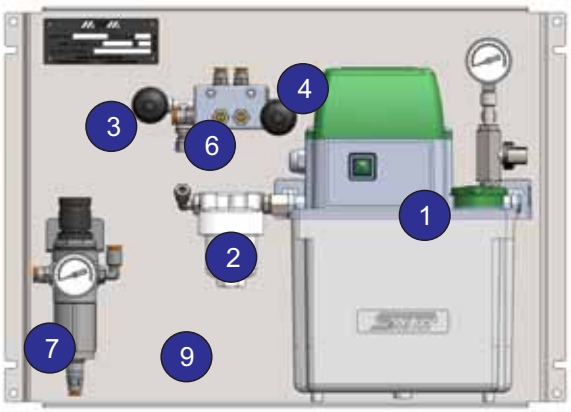

Oil-Air Unit Typ ZH

Fig. 7

Operation description:

The air-oil unit produces the air-oil mixture by dosing a small and precise amount of oil per each cycle in a continuous air flow.
The process does not generate any polluting oil mist; this makes the system environmentally friendly and respectful of the workers' health.
ZH air-oil lubrication unit has (in this example) 2 outlets. The pumping system (1) has a 3 liters capacity reservoir. The unit is connected to the compressed air network and to the electric power. The oil volume delivered to lubrication points depends on the dosing elements and on cycle frequency.
Oil in pressure flows through the 3 micron filter (2) to reach the air-oil mixer (6). The right amount of oil is distributed by dosing elements and mixed with air, the flow rate can be finely adjusted by a screw located on each outlet.
As option (air-oil unit ZHF), the air-oil mixture can be detected by an oil streak sensors IFX-C (5, fig. 4 and 5), which verifies the air-oil flow presence. The optical sensor is mounted outside on the mixer MVE-A (6).

As option (air-oil unit ZHS) a PLC (8 fig. 5) operates the pump lubrication cycles operates the pump lubrication cycles and monitors the signals of oil level switch, air pressure switch, oil pressure switch and optical oil streak sensors IFX-C.

Picture with normal operating conditions
after pre-lubrication and spindle enabling

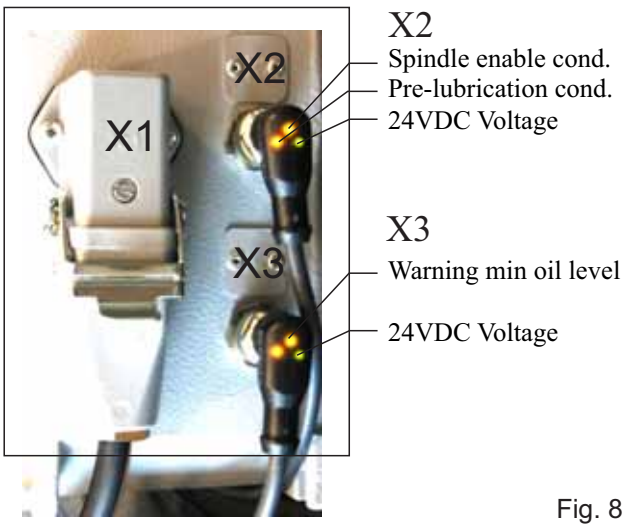

Fig. 8

Electrical connections to control and monitoring device

Plug connection X1, X2 and X3: see pag. 4

MWM Schmieranlagen Srl
Via G.Galilei 4B I-20068 Peschiera Borromeo (Mi)
Tel:+39 02 550 112 44 Fax +39 02 551 948 78
website://www.mql.it e-mail: info@mql.it

X1

X1- MAIN VOLTAGE Plug
230 VAC - 50/60Hz
Option:
115VAC - 50/60 Hz (UL-CSA)

PIN 1 230VAC - 50/60 Hz
PIN 2 N
PIN 5 PE

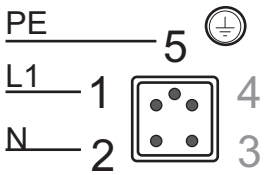

X2

1-2 PRE-LUBRICATION CONDITION
(Normally closed: closed in normal operation, opened in pre-lubrication). - Pre-lubrication= 1-2 and 1-4 opened
1-4 SPINDLE ENABLE/GENERAL ALARM
(Normally closed: closed in normal operation, in alarm condition or pre-lubrication condition: open)
1-4 READY MESSAGE for machine CN after detection of: oil level, oil pressure build-up and relief, air pressure, pre-lubrication cycle. **Ready** after pre-lubrication cycle.
FAILURE IN PRE-LUBRICATION CONDITION:
1-2 closed, 1-4 opened.

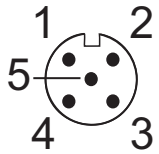

X2: M12 Plug 5-pin
PIN1 (+24VDC from the machine)
PIN2 OUT3/Output 3 (Pre-lubrication)
PIN3 0 V-
PIN4 OUT4/Output 4 (Spindle enable/General alarm)

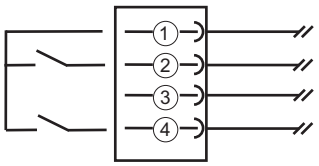

X3

1-2 NOT USED
1-4 WARNING MIN OIL LEVEL
(Normally closed: closed in normal operation, opened in alarm)**:**
Signal both in normal operation and in pre-lubrication condition.
X3: M12 Plug 5-pin
PIN1 (+24VDC from the machine)
PIN2 OUT1/Output 1 (Not used)
PIN3 0V-
PIN4 OUT2/Output 2 (Warning Min Oil level)

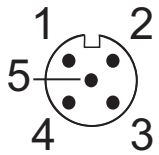

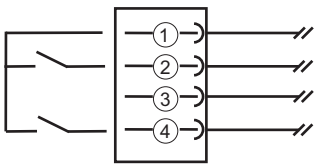

X2, X3: M12 Socket with Led indicators

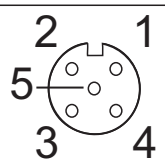

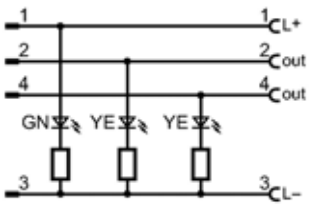

MWM Schmieranlagen Srl
Via G.Galilei 4B I-20068 Peschiera Borromeo (Mi)
Tel:+39 02 550 112 44 Fax +39 02 551 948 78
website://www.mql.it e-mail: info@mql.it